Sys35
inVision module

14W / 920lm / 2700K / DALI / Flood 50° / 600mm

60944

Design: O/M + Bartenbach GmbH

LED CRI>90 / >50.000h, L80/B10
2-step MacAdam / power supply included.
IP20 | 230Vac | 50/60Hz

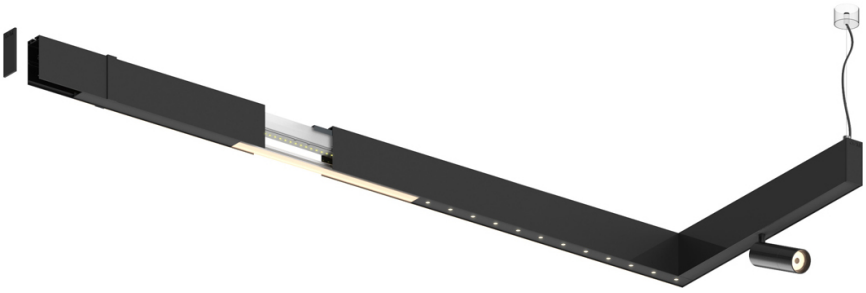

LED 2700K	Lichtquelle	Leuchte
Leistung	**14W**	**16W**
Strom	**1200lm**	**920lm**
Effizienz	**86lm/W**	**58lm/W**
LOR	**-**	**0.7666666666666667**
UGR	**-**	**<10**

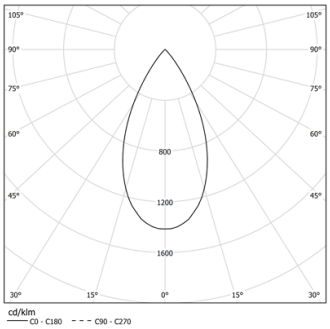

Abstrahlwinkel
Flood 50°

Anwendung

Gewicht
0,5Kg

mm

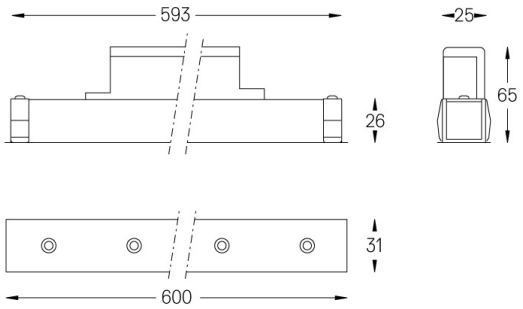

Ausführungen

- ○ **.01** Weiß / RAL 9010
- ● **.02** Schwarz / RAL 9005

This page was generated on 2025-12-03. Click here for the latest version.

www.om-light.com / mail@om-light.com Rua Maurício Lourenço Oliveira 186, 4405-034 Vila Nova de Gaia, Porto. Portugal. / Apartado 1538 4401-901 Vila Nova de Gaia, Porto Portugal / tel. +351 223 710 419