Over Track

4,5W / 380lm / 3000K / DALI / Medium 41° / ø86mm

60280

Design: O/M + Bartenbach GmbH
Track-mounted spotlight with die-cast aluminium body with electrostatic 100% polyester paint finish. Spot-lens with individual complex surface rips to provide a focal light and an extremely narrow beam. Orientable by 90° horizontal rotation and 330° vertical rotation.
Power supply incorporated.

LED CRI>90 / >50.000h, L80/B10
2-step MacAdam / Power supply included.
IP20 | 230Vac | 50/60Hz

3000K	Light Source	Luminaire
Power	**4,5W**	**5,8W**
Flux	**520lm**	**380lm**
Efficiency	**116lm/W**	**66lm/W**
LOR	**-**	**73%**
UGR	**-**	**230Vac**

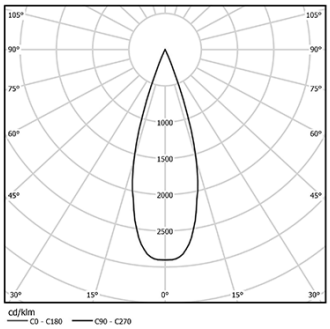

Beam angle
Medium 41°

Application

Weight
0,64Kg

mm

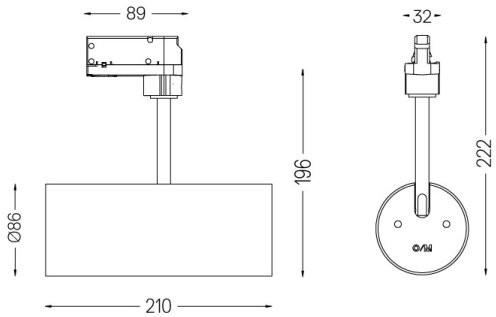

Finishes

- ○ **.01** White / RAL 9010
- ● **.02** Black / RAL 9005

This page was generated on 2026-02-04. Click here for the latest version.

www.om-light.com / mail@om-light.com Rua Maurício Lourenço Oliveira 186, 4405-034 Vila Nova de Gaia, Porto. Portugal. / Apartado 1538 4401-901 Vila Nova de Gaia, Porto Portugal / tel. +351 223 710 419