Beam
IP54

10W / 670lm / 2700K / On/Off / Medium 23° / ø75mm

60394

Design: O/M
Ceiling-recessed luminaire made of aluminium die-cast.
Recessing accessory for flush version supplied separately.

LED CRI>90 / >50.000h, L80/B10
2-step MacAdam / power supply included
IP54 | 230Vac | 50/60Hz

LED 2700K	Light Source	Luminaire
Power	**10W**	**12,5W**
Flux	**955lm**	**670lm**
Efficiency	**96lm/W**	**54lm/W**
LOR	**-**	**70%**
UGR	**-**	**<19**

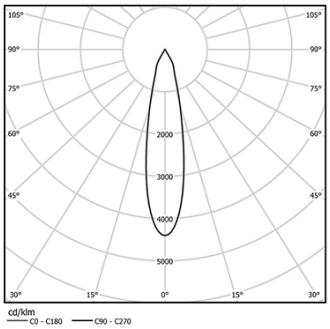

Beam angle
Medium 23°

Application

Weight
0,38Kg

mm

Ø70 (trim version)

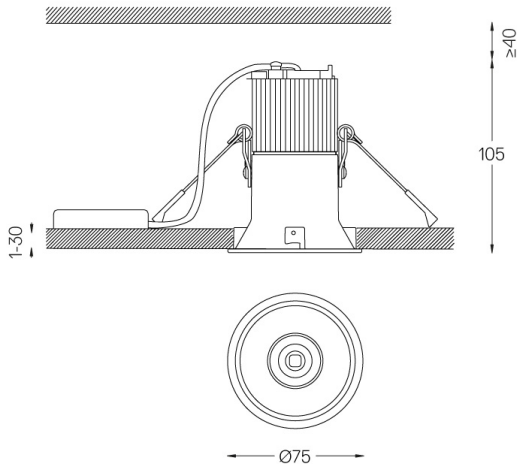

Finishes

- ○ **.04** Matt White
- ● **.05** Matt Black

Optional
59063 Flush accessory (12.5mm ceilings)
176x17mm
59064 Flush accessory (15mm ceilings)
176x19,5mm
59065 Flush accessory (25mm ceilings)
176x29,5mm

The cutout dimensions are for plasterboard ceilings. For other type of material please contact: support@om-light.com

Data according to regulations
2019/2020/EU supplemented by 2021/341 |2019/2015/EU supplemented by 2021/340/EU Energy Consumption Labelling Ordinance. This product contains a light source of efficiency class F
Model Identifier 2053560245H

This page was generated on 2025-06-16. Click here for the latest version.

www.om-light.com / mail@om-light.com Rua Maurício Lourenço Oliveira 186, 4405-034 Vila Nova de Gaia, Porto. Portugal. / Apartado 1538 4401-901 Vila Nova de Gaia, Porto Portugal / tel. +351 223 710 419