Stainless steel fitting accessory

59057

mm

Set of 2 stainless steel fitting accessory.

Finishes
.99

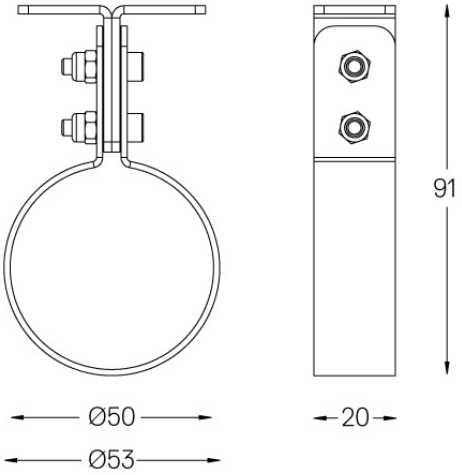

This page was generated on 2026-02-04.

www.om-light.com / mail@om-light.com Rua Maurício Lourenço Oliveira 186, 4405-034 Vila Nova de Gaia, Porto. Portugal. / Apartado 1538 4401-901 Vila Nova de Gaia, Porto Portugal / tel. +351 223 710 419